2025-2026
Coyote Creek School Map

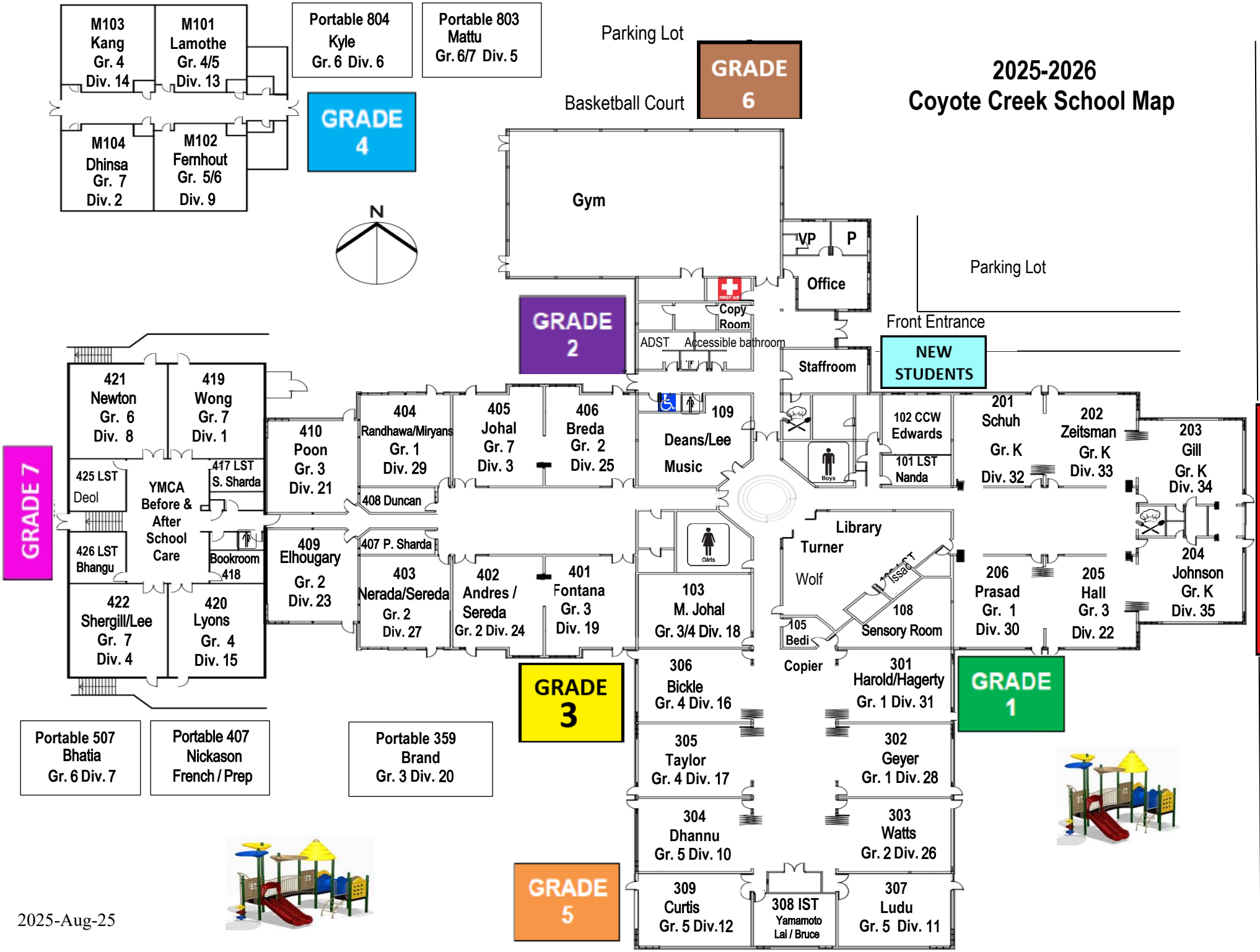

2025-Aug-25